PIC18F57Q43 Curiosity Nano

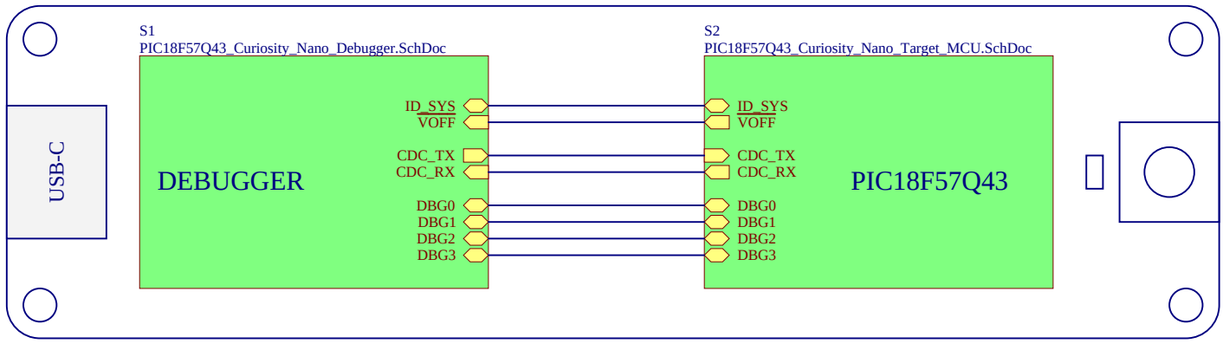

On-Board Peripherals		
LED0	RF3	Active Low
SW0	RB4	Active Low

Program / Debug Interface	
ICSP DAT	RB7
ICSP CLK	RB6
MCLR	RE3

IDE

Program Debug

Mass Storage

CURIOSITY (E:)

Drag & Drop Programming

helloworld.hex

Serial / CDC port	
UART[1/3/5]* TX	RF0
UART[1/3/5]* RX	RF1

*configure with Peripheral Pin Select (PPS)

Terminal

> Hello World!

DGI (Data Gateway Interface)	
Debug GPIO 0	RB4 (SW0)

Data Visualizer

TESTDOC1
A12-1314

TEST1
$ >_
A11-0457

FW1
A11-0406

PCBADOC1
A12-1400

PCB1
A08-3021

LABEL1
Product number/revision
Serial number
Label PCBA

S3
PIC18F57Q43_Curiosity_Nano_Revision_History.SchDoc

"Text in Silkscreen on PCB"

CNANO Template Revision: TLM 2.3

Project Owner: AH			
PCB Layout Contact: SLT			
PartNumber: DM164150	Project Title: *PIC18F57Q43 Curiosity Nano*	Variant: Default Assembly	
Sheet Title: Top Level			Designed with Altium
Size: A3	SCH #: A09-3290	Rev: 5	Date: 14.11.2024
	PCB #: A08-3021	Rev: 4	Sheet 1 of 4
File: PIC18F57Q43_Curiosity_Nano_TopLevel.SchDoc			Altium.com

PIC18F57Q43

	PIC18F47Q43	
Debugger	*Name*	*Pin*
CDC TX	UART[1/3/5] RX	**RF1**
CDC RX	UART[1/3/5] TX	**RF0**
DBG0	ICSPDAT	**RB7**
DBG1	ICSPCLK	**RB6**
DBG2	GPIO0	**RB4**
DBG3	$\overline{\text{MCLR}}$	**RE3**
VTG	**1.8V - 5.5V**	

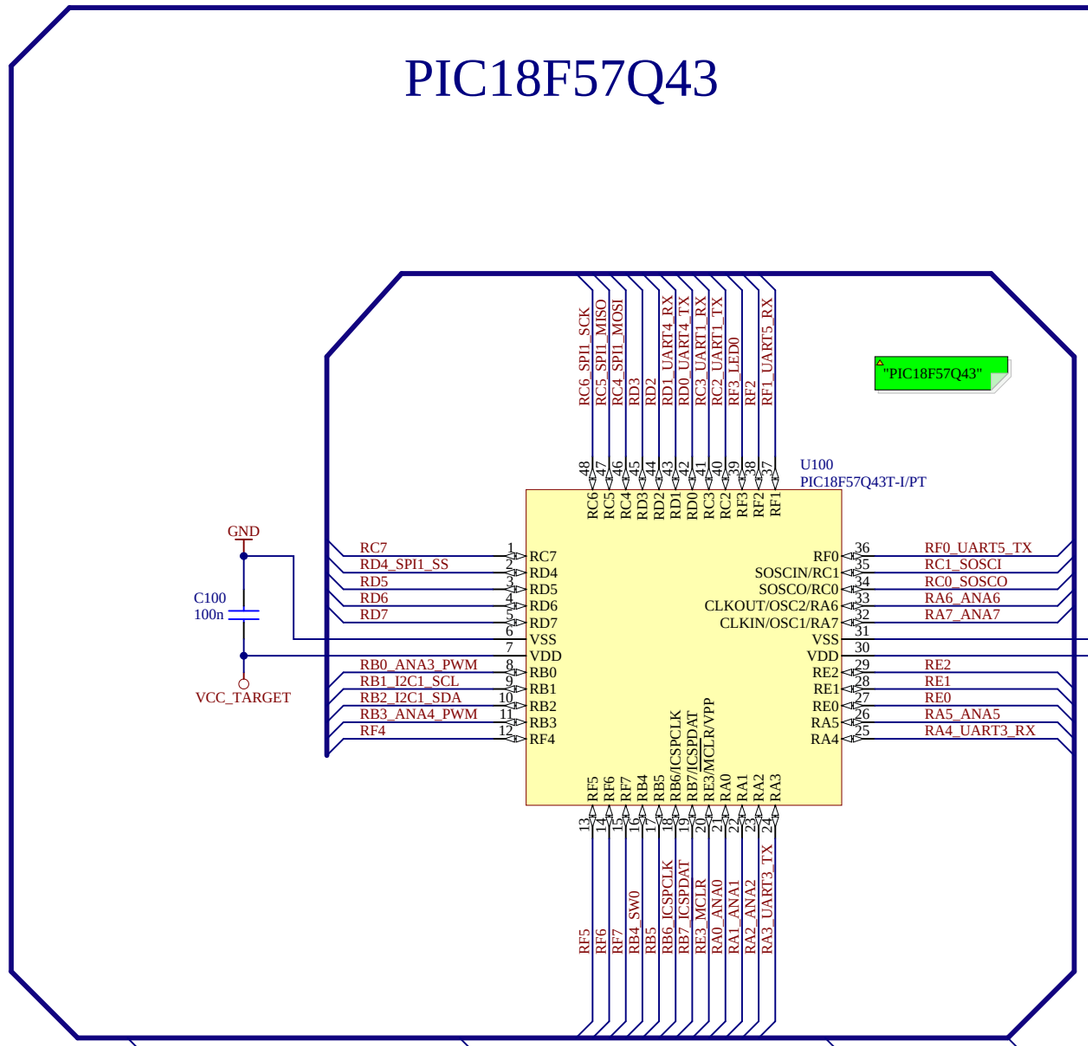

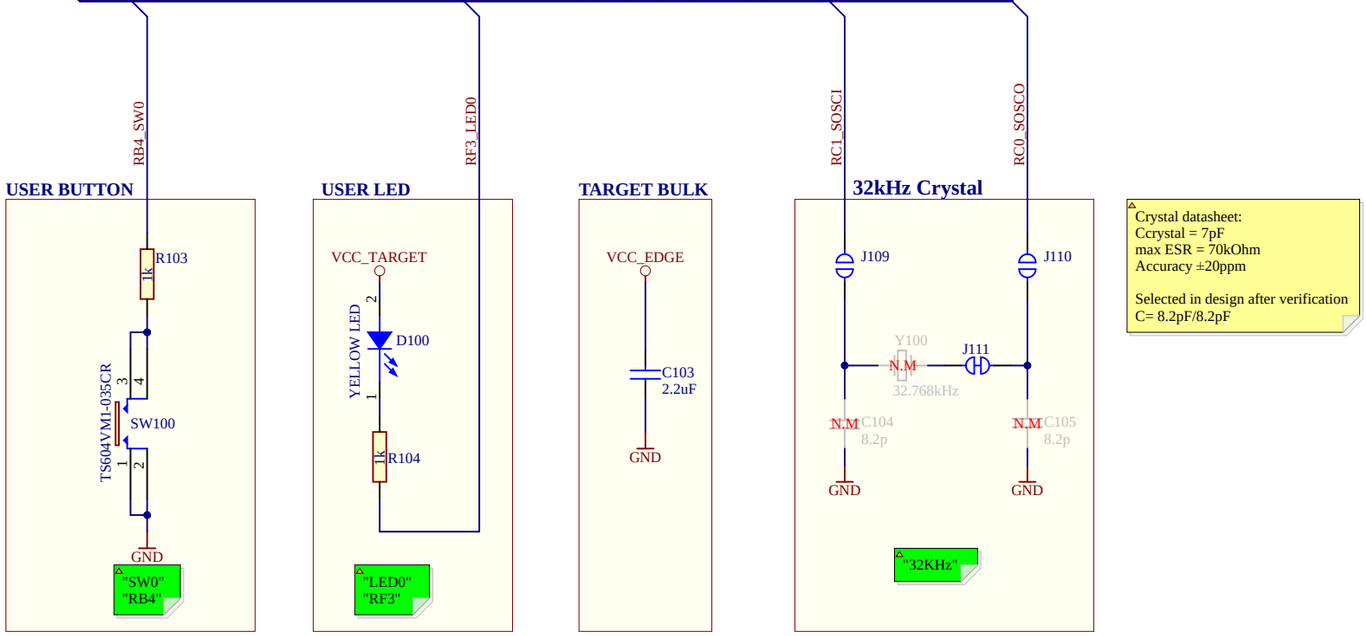

Crystal datasheet:
Ccrystal = 7pF
max ESR = 70kOhm
Accuracy ±20ppm

Selected in design after verification
C= 8.2pF/8.2pF

DEBUGGER CONNECTIONS

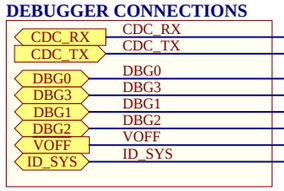

PROG/DEBUG Pull

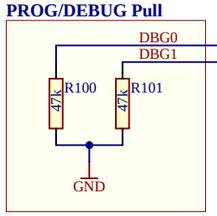

MCLR/RESET Pull

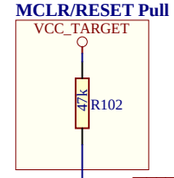

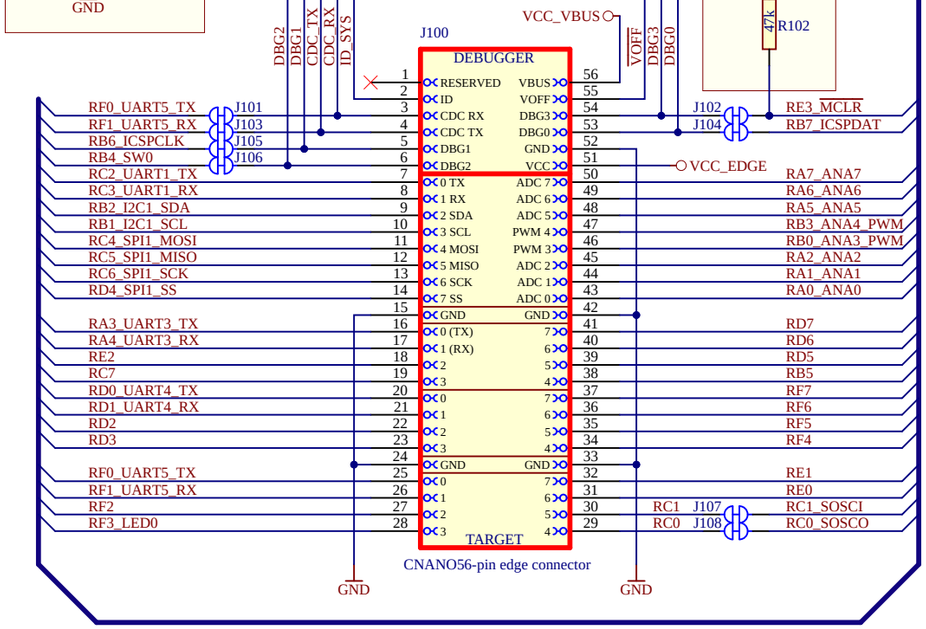

NOTE on UART/CDC:

RX/TX on the header denotes the input/output direction of the signal respective to it's source.

CDC TX is output from the DEBUGGER.
CDC RX is input to the DEBUGGER.
TX is output from the TARGET device.
RX is input to the TARGET device.

NOTE on I2C:

No pull-ups on board. Pull-ups must be mounted close to client device(s).

CNANO Template Revision: TLM 2.3

Project Owner: AH			
PCB Layout Contact: SLT			
PartNumber: DM164150	Project Title: *PIC18F57Q43 Curiosity Nano*	Variant: Default Assembly	
Sheet Title: Target MCU			*Designed with Altium* Altium.com
Size A3	SCH #: A09-3290	Rev: 5	Date: 14.11.2024
	PCB #: A08-3021	Rev: 4	Sheet 2 of 4
File: PIC18F57Q43_Curiosity_Nano_Target_MCU.SchDoc			

DEBUGGER

TARGET ADJUSTABLE REGULATOR

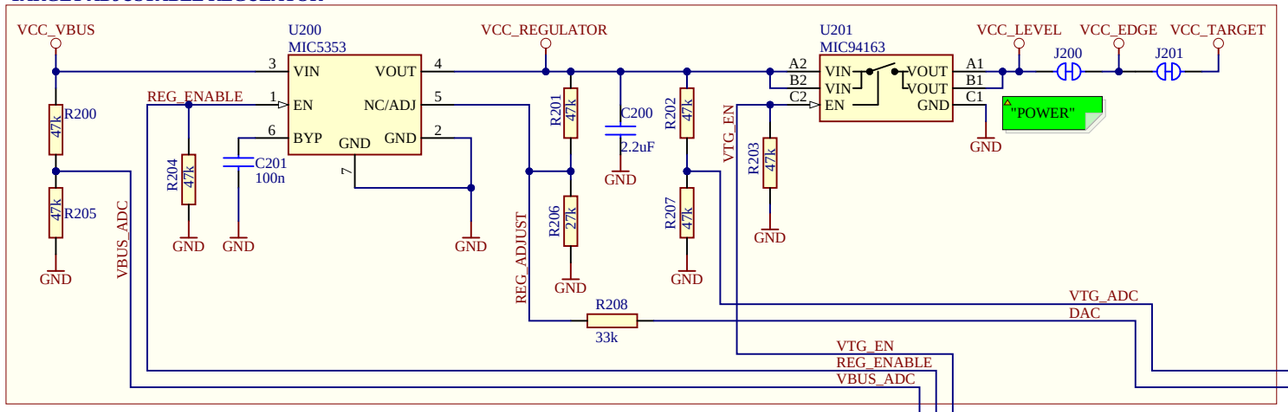

J200:
- Cut-strap used for full separation of target power from the level shifters and on-board regulators.
- For current measurements using an external power supply, this strap could be cut for more accurate measurements. Leakage back through the switch is in the micro ampere range.

J201:
- For current measurements using the on-board power supply, this strap must be cut and an ammeter connected across.

MIC5353:
Vin: 2.6V to 6V
Vout: 1.25V to 5.1V
Imax: 500mA
Dropout (typical): 50mV@150mA, 160mV @ 500mA
Accuracy: 2% initial
Thermal shutdown and current limit

Maximum output voltage is limited by the input voltage and the dropout voltage in the regulator.

Interface / Signal	ICSP™ TARGET	UPDI TARGET	SWD TARGET
CDC TX	UART RX	UART RX	UART RX
CDC RX	UART TX	UART TX	UART TX
DBG0	DAT	UPDI	SWDAT
DBG1	CLK	GPIO	SWCLK
DBG2	GPIO	GPIO	SWO/GPIO
DBG3	$\overline{MCLR}$	$\overline{RESET}$	$\overline{RESET}$
VCC	-	-	-

ADJUSTABLE OUTPUT AND LIMITATIONS:
- The DEBUGGER can adjust the output voltage of the regulator between 1.25V and 5.1V to the target.
- The voltage output is limited by the input (USB), which can vary between 4.40V to 5.25V
- The level shifters have a minimal voltage level of 1.65V and will limit the minimum operating voltage allowed for the target to still allow communication.
- The MIC94163 has a minimal volatege level of 1.70V and will limit the minimum voltage delivered to the target.
- Firmware configuration will limit the voltage range to be within the the target specification.

DBG3 OPEN DRAIN

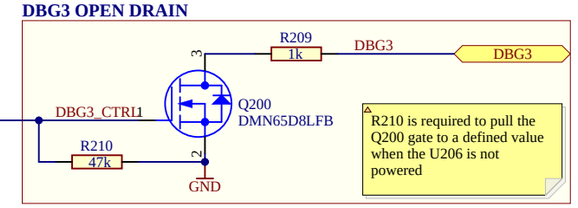

R210 is required to pull the Q200 gate to a defined value when the U206 is not powered

VOFF
VOFF

VBUS SLEW RATE- & CURRENT-LIMIT

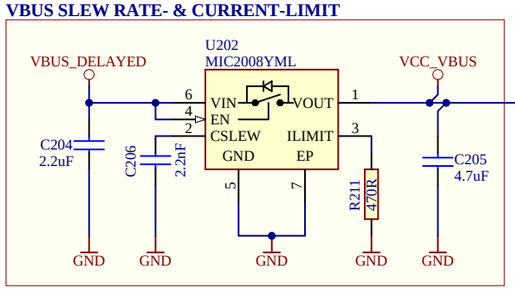

SLEW RATE LIMIT:
- With C206 set to 2200pF, the slew rate of VCC_VBUS is limited to 2 V/ms by the power switch MIC2008.

CURRENT LIMIT:
- With R211 set to 470ohm, the current through the power switch MIC2008 is limited to 500mA.

DEBUGGER REGULATOR

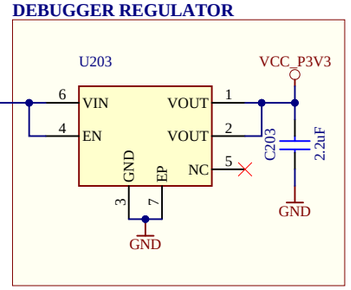

MIC5528:
Vin: 2.5V to 5.5V
Vout: Fixed 3.3V
Imax: 500mA
Dropout: 260mV @ 500mA

VBUS START-UP DELAY

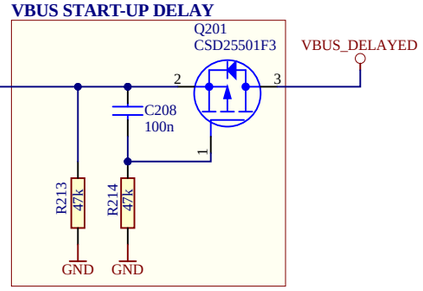

START-UP DELAY::
- With C208 set to 0.1uF and R214 set to 47kohm, the P-MOS is delaying the turn-on of VCC_DELAYED by ~1ms, compared to VBUS.

DEBUGGER USB-C CONNECTOR

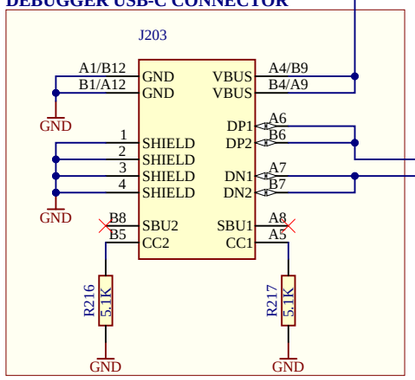

USBD_P
USBD_N

TP200
TP201

TP200 and TP201 are MTG Holes in the corners of the PCB in the DEBUGGER section labelled "GND" on the silkscreen.

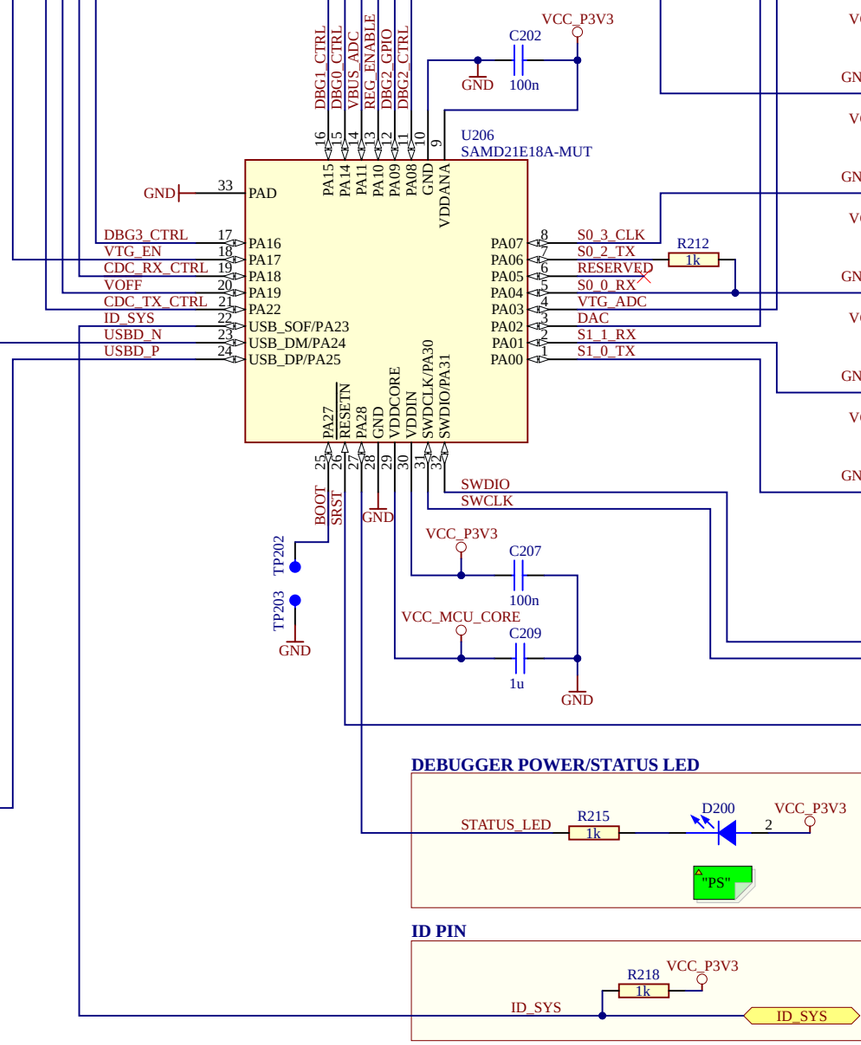

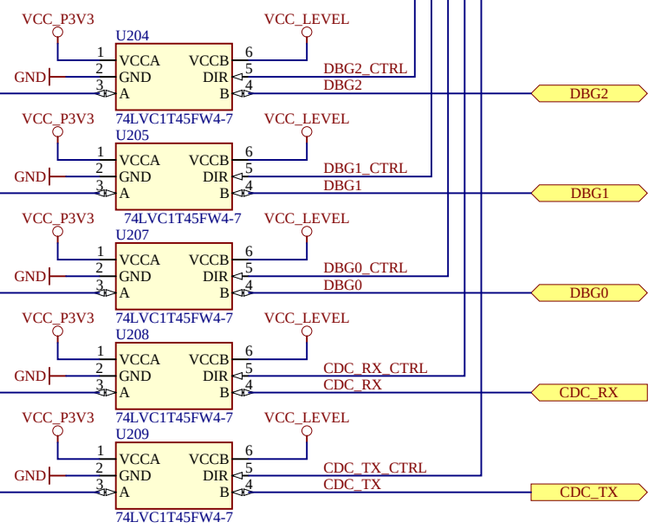

DEBUGGER TESTPOINT

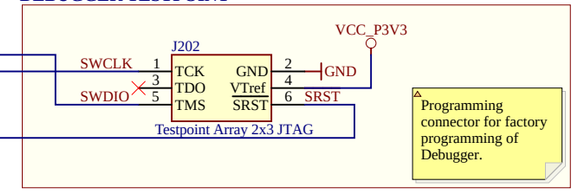

Programming connector for factory programming of Debugger.

DEBUGGER POWER/STATUS LED

ID PIN

CNANO Template Revision: TLM 2.3

Project Owner: AH			
PCB Layout Contact: SLT			
PartNumber: DM164150	Project Title: ***PIC18F57Q43 Curiosity Nano***	Variant: Default Assembly	
Sheet Title: Debugger			
Size: A3	SCH #: A09-3290	Rev: 5	Date: 14.11.2024
	PCB #: A08-3021	Rev: 4	Sheet 3 of 4
File: PIC18F57Q43_Curiosity_Nano_Debugger.SchDoc			

Designed with Altium — Altium.com

Revision History

PCB Assembly Rev 1:

Design Changes:

Initial Design

PCB:

PCB revision 1

PCB Assembly Rev 2:

Design Changes:

Board edge connector updated to staggered and current measurement footprint added. Added pull-down on gate of reset MOSFET (Q100), and removed decoupling from SAMD21 reset line.Changed Target reset pull-up value from 100k to 47k to ease production.

PCB:

PCB revision 2

PCB Assembly Rev 3:

Design Changes:

Changed pinout of the edge connector
Changed default crystal (XC200) to available type.

PCB:

PCB revision 3

PCB Assembly Rev 5:

Design Changes:

Designators reset.
USB-C Connector.
Power input and current limit redesign.
Changed default crystal (XC200) to available type.

PCB:

PCB revision 4
Updated footprint for J100, U204, U205, U207, U208, U209.
U100 Placement changed slightly, and adjusted tracks, polygons, teardrops and text accordingly.

CNANO Template Revision: TLM 2.3

Project Owner: AH			
PCB Layout Contact: SLT			
PartNumber: DM164150	Project Title: *PIC18F57Q43 Curiosity Nano*	Variant: Default Assembly	
Sheet Title: Revision History			Designed with Altium
Size: A3	SCH #: A09-3290	Rev: 5	Date: 14.11.2024
	PCB #: A08-3021	Rev: 4	Sheet 4 of 4
File: PIC18F57Q43_Curiosity_Nano_Revision_History.SchDoc			Altium.com

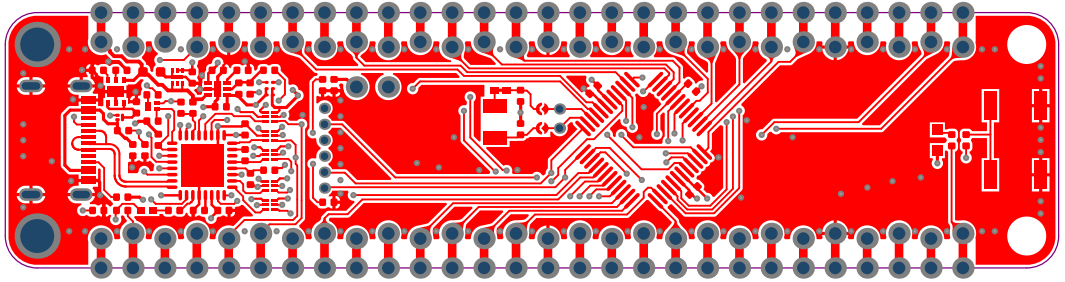

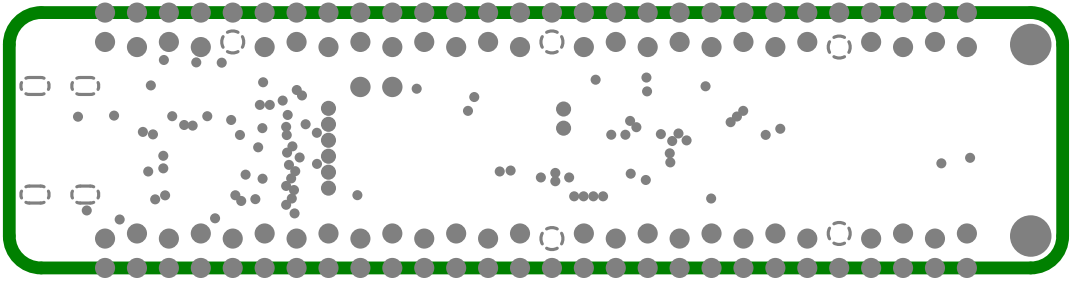

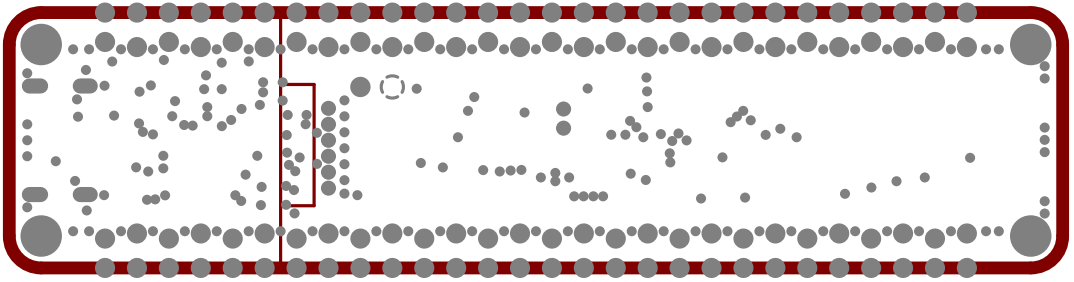

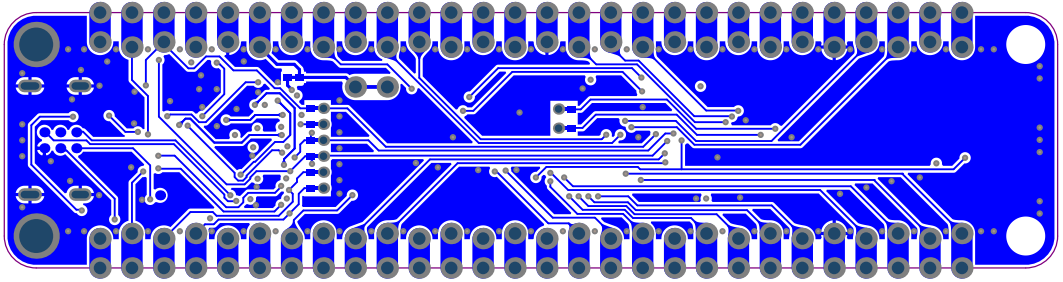

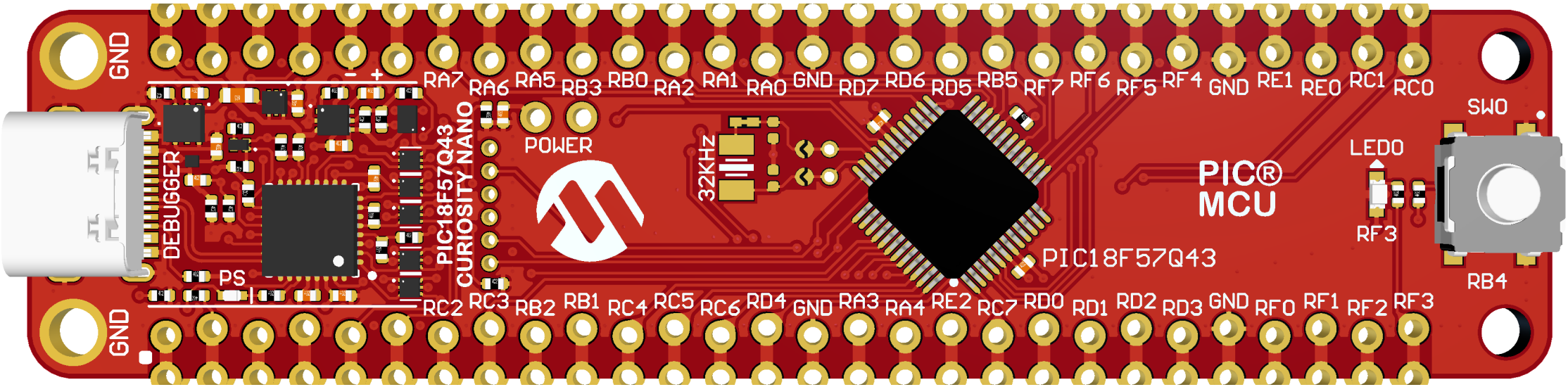
GND
GND
DEBUGGER
PS
PIC18F57Q43
CURIOSITY NANO
RA7 RA6 RA5 RB3 RB0 RA2 RA1 RA0 GND RD7 RD6 RD5 RB5 RF7 RF6 RF5 RF4 GND RE1 RE0 RC1 RC0
POWER
32KHz
PIC®
MCU
PIC18F57Q43
LED0
RF3
SW0
RB4
RC2 RC3 RB2 RB1 RC4 RC5 RC6 RD4 GND RA3 RA4 RE2 RC7 RD0 RD1 RD2 RD3 GND RF0 RF1 RF2 RF3

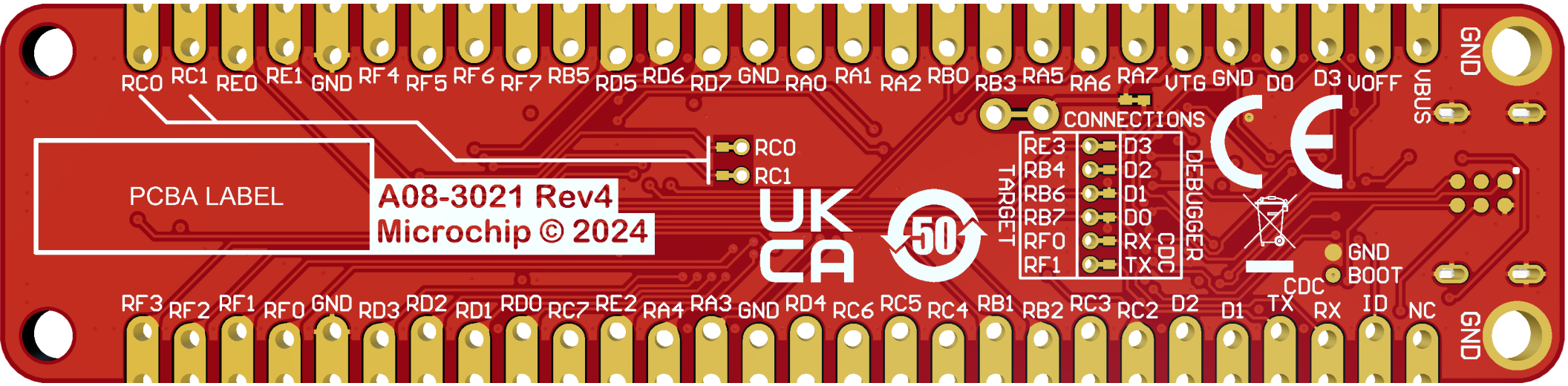
RC0 RC1 RE0 RE1 GND RF4 RF5 RF6 RF7 RB5 RD5 RD6 RD7 GND RA0 RA1 RA2 RB0 RB3 RA5 RA6 RA7 VTG GND D0 D3 VOFF VBUS GND
PCBA LABEL
A08-3021 Rev4
Microchip © 2024
RC0
RC1
CONNECTIONS
TARGET
RE3
RB4
RB6
RB7
RF0
RF1
D3
D2
D1
D0
RX
TX
CDC
DEBUGGER
GND
BOOT
RF3 RF2 RF1 RF0 GND RD3 RD2 RD1 RD0 RC7 RE2 RA4 RA3 GND RD4 RC6 RC5 RC4 RB1 RB2 RC3 RC2 D2 D1 CDC TX RX ID NC GND

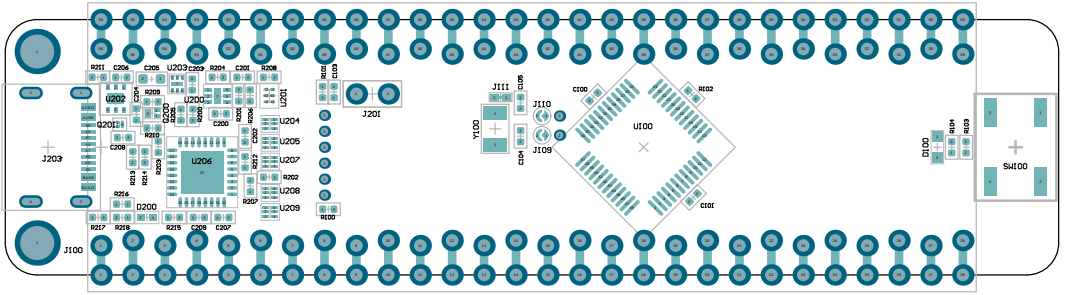

R211
C206
C205
U203
C203
R204
C201
R208
R101
C103
R102
C102
U202
C204
R209
U200
U201
J201
J111
C105
J110
C100
R102
Q201
Q200
R200
R201
R206
C200
U204
Y100
U100
J203
C208
R210
U205
C104
J109
U206
U207
R212
R202
R213
R214
R203
U208
R216
D200
R207
U209
R100
D100
R104
R103
SW100
R217
R218
R215
C209
C207
J100

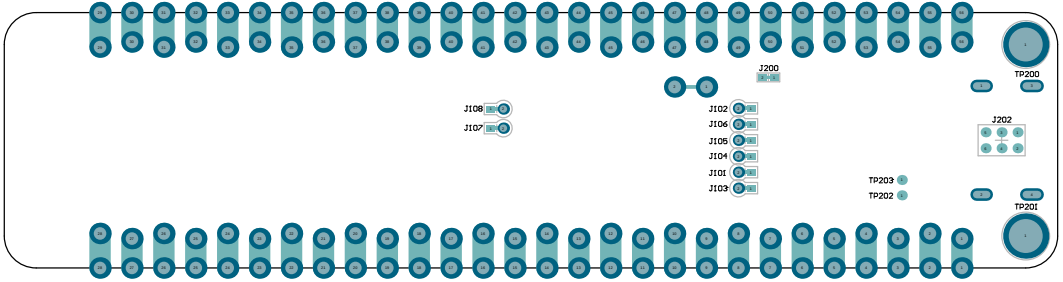
J200
TP200
J108
J107
J102
J106
J105
J104
J101
J103
J202
TP203
TP202
TP201

Board Outline

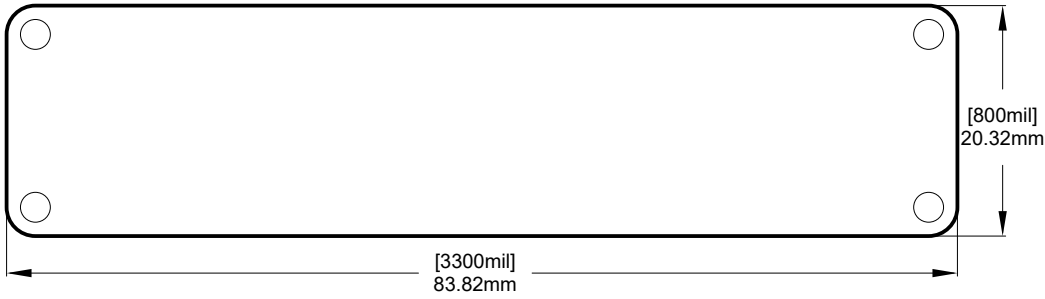

Through-Hole Dimensions

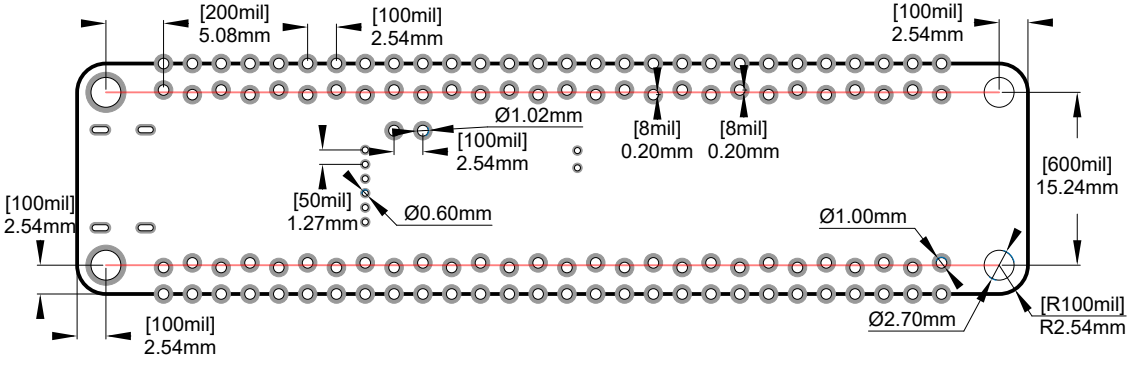

Centerline of staggered through-holes for pin headers.

Test Point Placement [Bottom View]

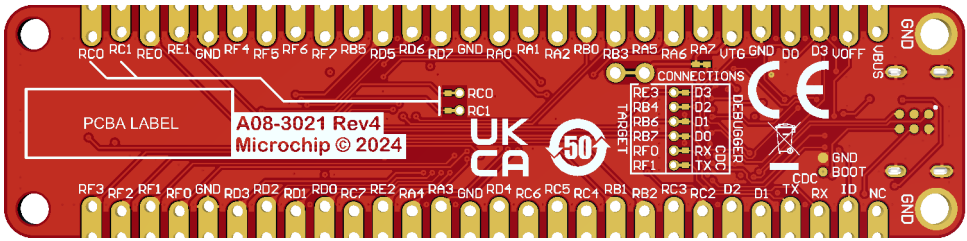

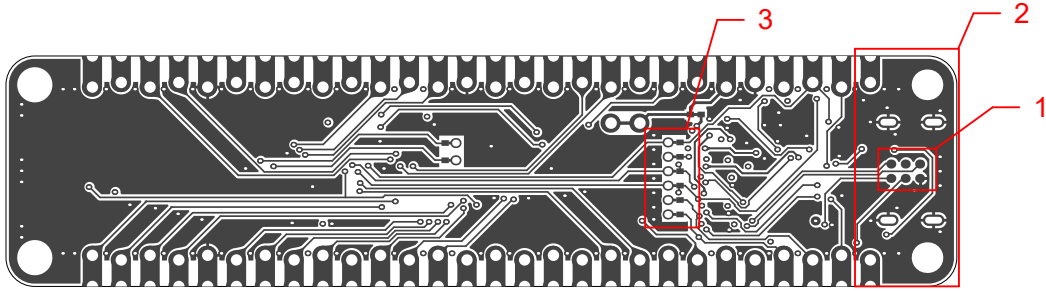

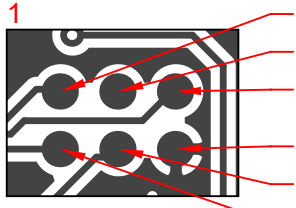

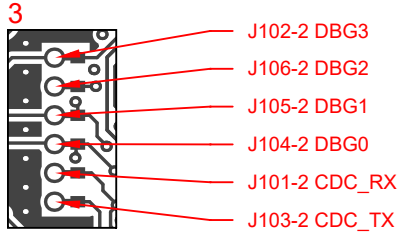

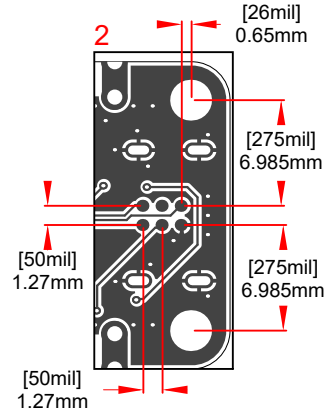

PCB Stackup

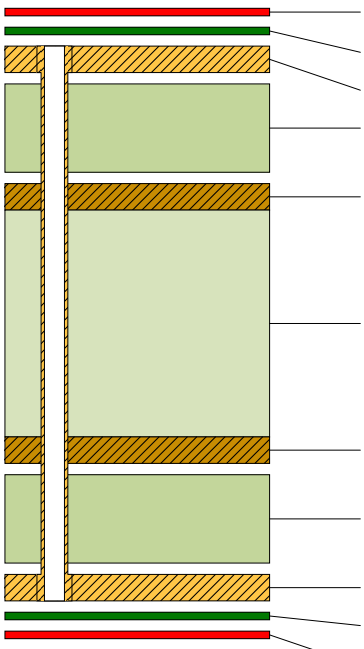

Material	Layer	Thickness	Dielectric Material	Type	Gerber
	Top Overlay			Legend	GTO
Surface Material	Top Solder	0.010mm	Solder Resist	Solder Mask	GTS
Copper	Top Layer	0.035mm		Signal	GTL
Prepreg		*0.117mm*	*PP-016*	*Dielectric*	
Copper	Gnd Plane	0.035mm		Internal Plane	GP1
Core		*1.200mm*	*FR-4*	*Dielectric*	
Copper	Pwr Plane	0.035mm		Internal Plane	GP2
Prepreg		*0.117mm*	*PP-016*	*Dielectric*	
Copper	Bottom Layer	0.035mm		Signal	GBL
Surface Material	Bottom Solder	0.010mm	Solder Resist	Solder Mask	GBS
	Bottom Overlay			Legend	GBO

Total thickness: 1.594mm

Component list

PIC18F57Q43 Curiosity Nano

PCBA Number: A09-3290

PCBA Revision: 5

Variant: Default Assembly

Print Date: 14.11.2024 15:02:02

Fitted	Designator	Quantity	Value	Manufacturer	MPN	Description
Fitted	C100, C101, C201, C202, C207, C208	6	100n	Yageo	CC0402KRX7R7BB104	Ceramic capacitor, SMD 0402, X7R, 16V, +/-10%
Fitted	C103, C200, C203, C204	4	2.2uF	TDK	C1005X5R1A225K050BC	CAP CER 2.2UF 10V 10% X5R 0402
Fitted	C205	1	4.7uF	Yageo	CC0603KRX5R6BB475	Ceramic capacitor, SMD 0603, X5R, 10V, 10% (de31036)
Fitted	C206	1	2.2nF	Kemet	C0402C222J3GACTU	Ceramic capacitor, SMD 0402, C0G, 25V, +/-5%
Fitted	C209	1	1u	Kemet	C0402C105K9PAC	Ceramic capacitor, SMD 0402, X5R, 6.3V, +/-10% (de26942)
Fitted	D100	1	YELLOW LED	ROHM	SML-D12Y1WT86	LED, SMD 0603, Yellow, Wave length=590nm, 100mcd @ (20mA, 2.2Vf) rohm
Fitted	D200	1	GREEN LED	ROHM	SML-P12MTT86R	LED, SMD 0402, Green, Wave length=569nm, 2.1mcd @ (1mA, 1.9Vf)rohm
Fitted	FW1	1	nEDBG firmware			nEDBG firmware
Fitted	J203	1	L-KLS1-5409-R	Cabcon A/S	L-KLS1-5409-R	USB2.0 Type-C, Surface mount signals and DIP shield
Fitted	LABEL1	1	Label PCBA	ACT Logimark AS	505462	PCBA identification label PP Top White Gloss
Fitted	PCB1	1	PIC18F57Q43 Curiosity Nano PCB documentation			PIC18F57Q43 Curiosity Nano PCB documentation
Fitted	PCBADOC1	1	A09-3290 PCBA files			PIC18F57Q43 Curiosity Nano PCBA documentation
Fitted	Q200	1	DMN65D8LFB	Diodes Incorporated	DMN65D8LFB-7	N-channel MOSFET, DFN1006-3 (SOT883), 60V, 330mA, 4Ohm
Fitted	Q201	1	CSD25501F3	Texas Instruments	CSD25501F3	P-Channel MOSFET, LGA, 20V, 3.6A, 76mOhm
Fitted	R100, R101, R102, R200, R201, R202, R203, R204, R205, R207, R210, R213, R214	13	47k	KOA	RK73H1ETTP4702F	Thick film resistor, SMD 0402, 1/16W, 1%
Fitted	R103, R104, R209, R212, R215, R218	6	1k	Yageo	RC0402FR071KL	Thick film resistor, SMD 0402, 1/16W, 1%
Fitted	R206	1	27k	Yageo	RC0402FR-0727KL	Thick film resistor, SMD 0402, 1/16W, 1%
Fitted	R208	1	33k	Yageo	RC0402FR-0733KL	Thick film resistor, SMD 0402, 1/16W, 1%
Fitted	R211	1	470R	Yageo	RC0402FR-07470RL	Thick film resistror, SMD 0402, 1/16W, 1%
Fitted	R216, R217	2	5.1K	Panasonic	ERJ-2RKF5101X	Thick film resistor, SMD 0402, 1/10W, 1%
Fitted	SW100	1	TS604VM1-035CR	Dailyw ell Electronics Co.LTD	TS604VM1-035CR-R	SWITCH, SMD, 260gf, 6.4mm X 6.2mm
Fitted	TEST1	1	PIC18F57Q43 Curiosity Nano test			Fixture test for PIC18F57Q43 Curiosity Nano
Fitted	TESTDOC1	1	Curiosity Nano Test Instructions			Generic Test Instructions for Curiosity Nano
Fitted	U100	1	PIC18F57Q43T-I/PT	Microchip	PIC18F57Q43T-I/PT	PIC18F57Q43 microcontroller, 48-pin TQFP 7mm x 7mm x 1.0mm
Fitted	U200	1	MIC5353	Microchip	MIC5353YMT-TR	500mA Ultra Low Dropout LDO regulator, 2% accuracy, 1.6x1.6mm MLF
Fitted	U201	1	MIC94163	Microchip	MIC94163YCS-TR	Loadsw itch, Rds(on) = 14.5mohm, 1.0mm x 1.5mm WLCSP, reverse blocking
Fitted	U202	1	MIC2008YML	Microchip	MIC2008YML-TR	0.2A- 2.5A adjustable current limit pow er sw itch, 2mm x 2mm DFN
Fitted	U203	1	MIC5528-3.3YMT	Microchip	MIC5528-3.3YMT-T5	LDO 3.3V 0.5A 6TDFN
Fitted	U204, U205, U207, U208, U209	5	74LVC1T45FW4-7	Diodes Incorporated	74LVC1T45FW4-7	Single-Bit Dual-Supply Transceive, 1.65-5.5 Translation and 3-State Outputs
Fitted	U206	1	SAMD21E18A-MUT	Microchip	ATSAMD21E18A-MUT	32-bit RISC MCU 32pin
Not Fitted	C104, C105	0	8.2p	Yageo	CC0402DRNPO9BN8R2	Ceramic capacitor, SMD 0402, NP0, 50V, +/-5%
Not Fitted	Y100	0	32.768kHz	Microchip	VMK3-9002-32K7680000TR	Crystal, 32.768kHz, CL=7.0pF, ESR=70kOhm, SMD LxW=3.2 x 1.5mm, 20ppm
		60				

Approved

Notes